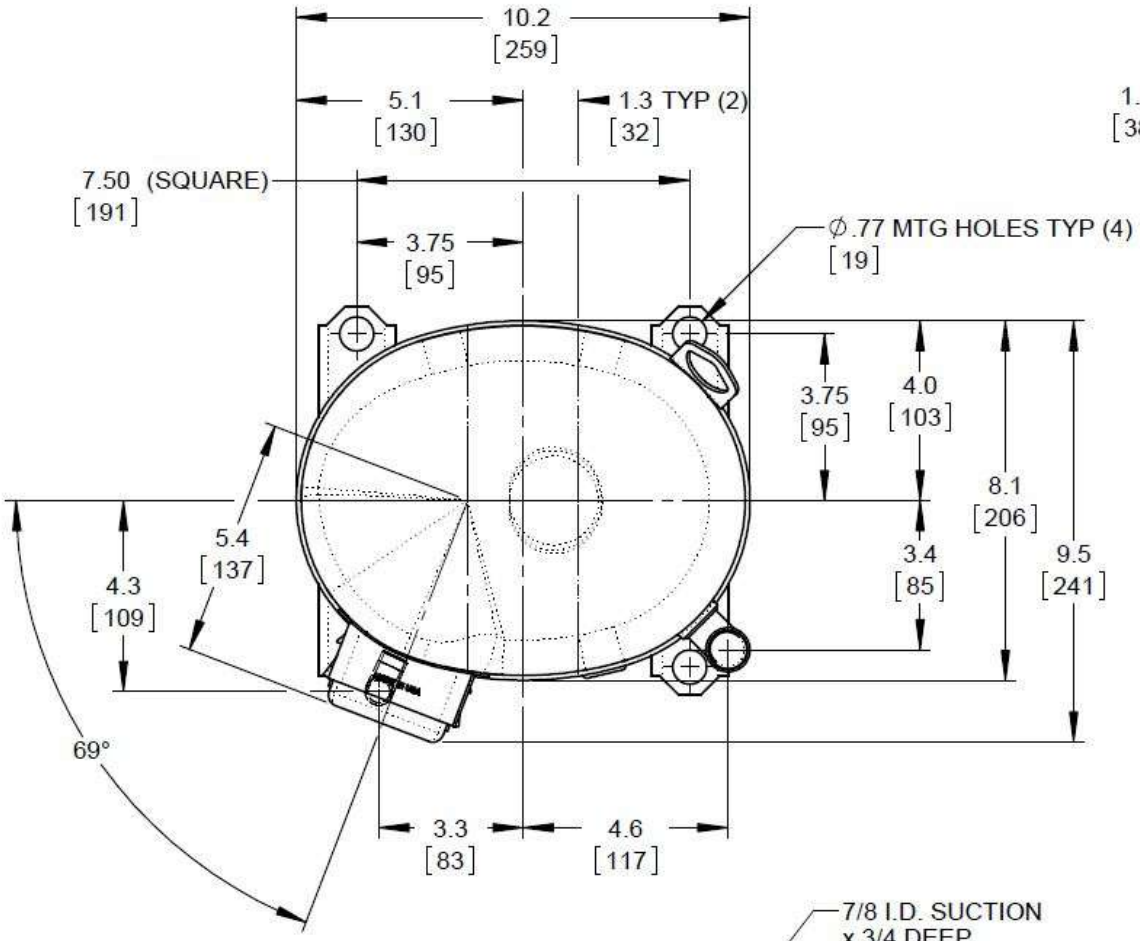

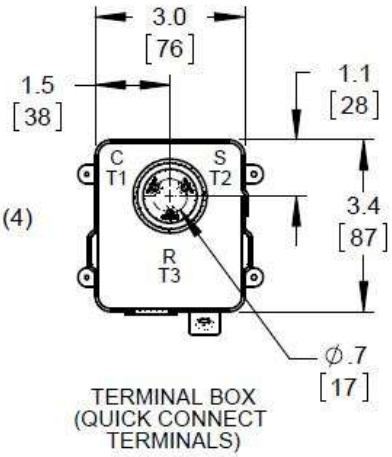

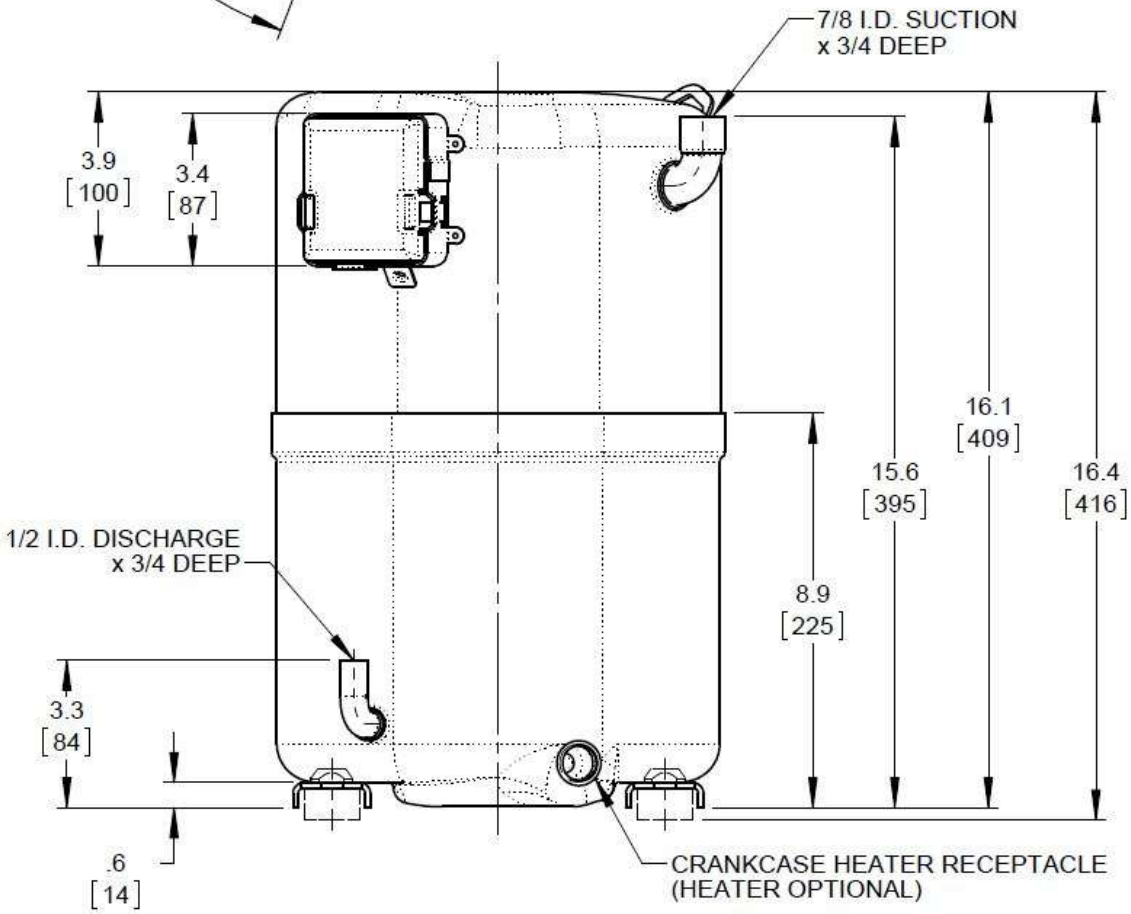

MODEL: **H73A623DBEA**

VOLTAGE:	PH:	Hz:	LRA:
460	3	60	62
380/415	3	50	62

E/N RELEASE: **C17405**

REVISIONS

C	V06701	BAM
D	V28003	BAM

TOLERANCES UNLESS SPECIFIED

ONE PLACE DECIMAL: ±.125 (3.158mm)
TWO PLACE DECIMAL: ±.06 (1.5mm)
ANGULAR: ±5°

MARKETING REQ: 5447

CHKD: RDD 7/26/11

DRWN: JLH 4/13/11

Bristol Compressors International Inc.

B/M NO: **702464**